VALVO

Fig. GIR10N

Resilient Seated NRS Gate Valve PN10

Material Specifications

Description	Material
Body	Ductile Iron
Disc	Ductile Iron with EPDM / BUNA
Disc Nut	Brass
Bonnet	Ductile Iron
Seal Ring	EPDM
Hand Wheel	Carbon Steel



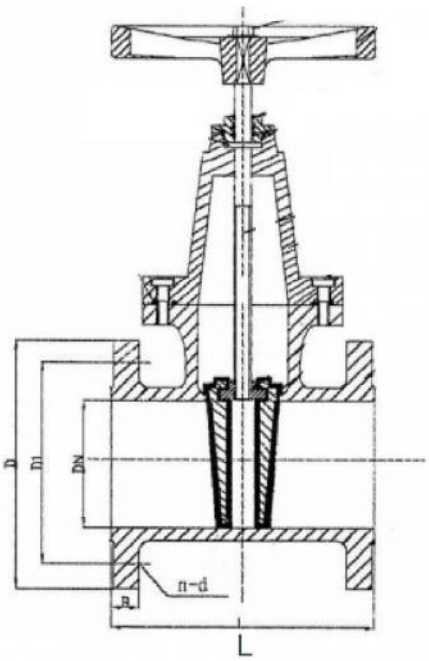

Note:

1. Design confirm to EN 1171
2. Face to face dimensions to EN 558 F4
3. Flanged ends to EN 1092-2
4. Internally and Externally epoxy coating

Dimensions

DN		D	D1	L	n-Ød
Inches	MM				
2"	50	165	125	150	4-19
2 1/2"	65	185	145	170	4-19
3"	80	200	160	180	8-19
4"	100	220	180	190	8-19
5"	125	250	210	200	8-19
6"	150	285	240	210	8-23
8"	200	340	295	230	8-23
10"	250	395	350	250	12-23
12"	300	445	400	270	12-23
14"	350	505	460	290	16-23
16"	400	565	515	310	16-28
18"	450	615	565	330	20-28
20"	500	670	620	350	20-28
24"	600	840	725	390	20-31

All dimensions are nominal (indicative)
Actual dimensions may vary